Recreational Boating Facilities & Fishing Piers and Platforms

- Boating facility provisions
- Alterations
- Fishing facility provisions
- Questions

Americans with Disabilities Act

Title II covers:

- **State and Local government Facilities**

Americans with Disabilities Act

Title III covers:

- Commercial Facilities
- Places of Public Accommodation
- Non-Profit as well as For-Profit

Architectural Barriers Act

Covers:

- **facilities that are designed, constructed, altered, or leased by, or on behalf of the United States.**
- **facilities receiving certain types of Federal Financial assistance.**

New Standards under the ADA & ABA

Updated *ADA and ABA Guidelines* (2004)

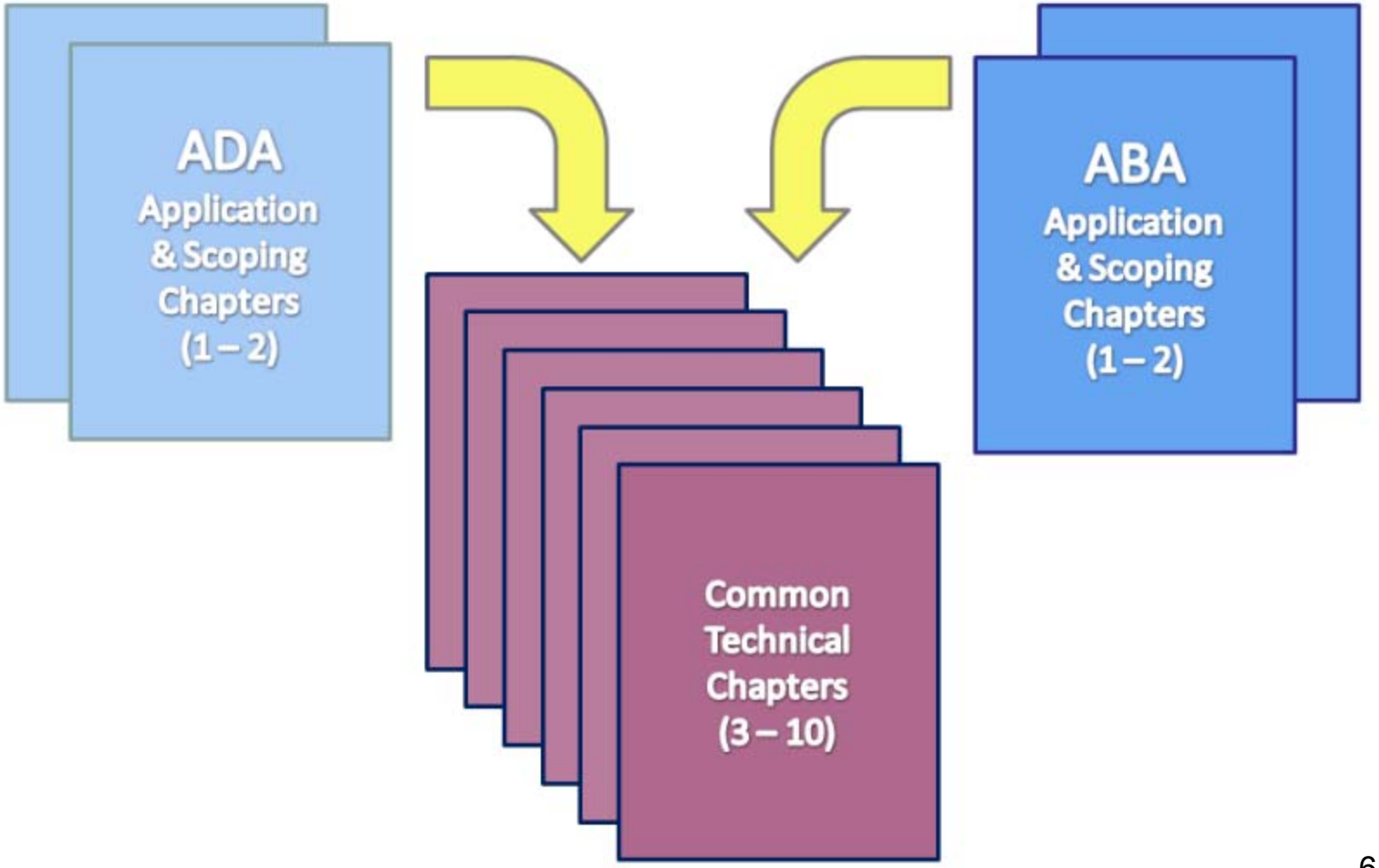

DOJ's Revised ADA Rule (Regulations)

- Nondiscrimination policies
- 2010 Standards
  - New construction and Alterations
  - Additional design requirements
- Application of 2010 Standards to Existing facilities

DOJ's ADA Standards (2010)

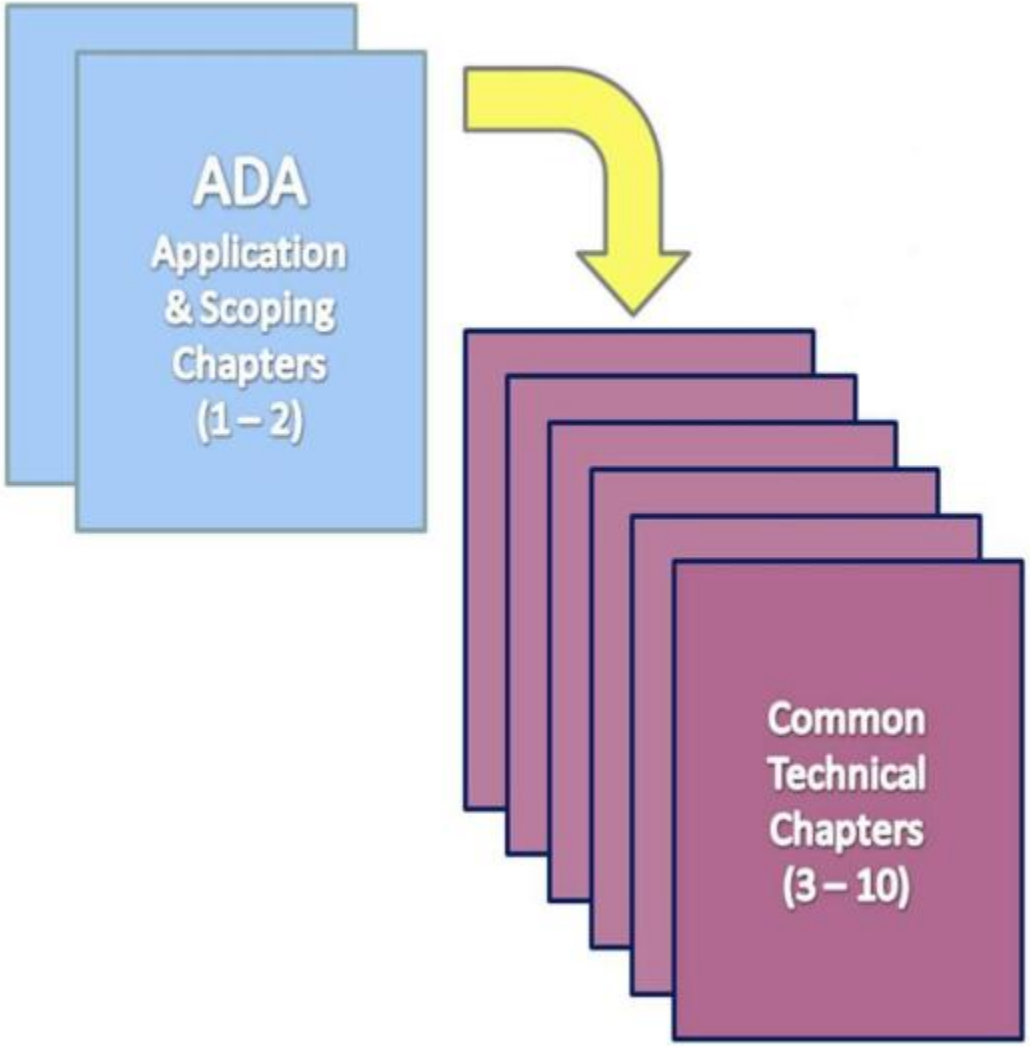

Americans with Disabilities Act
and Architectural Barriers Act
Accessibility Guidelines

July 23, 2004

UNITED STATES ACCESS BOARD

A FEDERAL AGENCY COMMITTED TO ACCESSIBLE DESIGN

Excluding ABA Chapters 1 & 2 (pp. 72 – 140)

New Construction

New ADA Standards

DOJ's 2010 standards

(mandatory March 15, 2012)

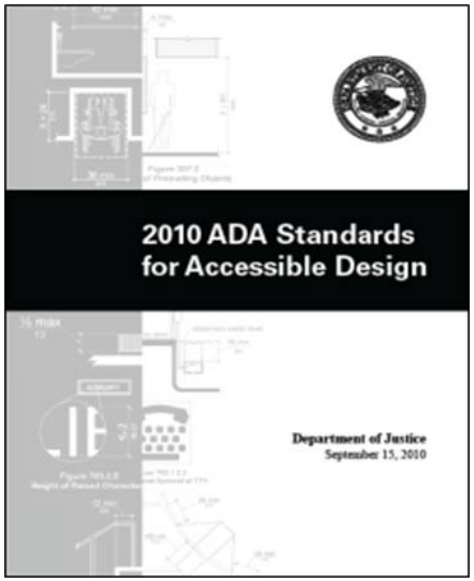

Based on the Board's ADA-ABA Guidelines (2004)

Architectural Barriers Act Accessibility Standards

(Federal facilities)

- Similar standards in effect for all federally funded facilities (except housing)
- Effective May 8, 2006 (February 6, 2007 for leased facilities)
  for new construction
  alteration

Locating provisions

Table of Contents

ADA Application and Scoping
- ADA Chapter 1: Application and Administration
- ADA Chapter 2: Scoping Requirements

ABA Application and Scoping
- ABA Chapter 1: Application and Administration
- ABA Chapter 2: Scoping Requirements

Technical Chapters
- Chapter 3: Building Blocks
- Chapter 4: Accessible Routes
- Chapter 5: General Site and Building Elements
- Chapter 6: Plumbing Elements and Facilities
- Chapter 7: Communication Elements and Features
- Chapter 8: Special Rooms, Spaces and Elements
- Chapter 9: Built-In Elements
- Chapter 10: Recreation Facilities

Existing facilities

What Standards Apply to Existing ADA Facilities?

- **Title II — Program accessibility**

- **Title III — Readily achievable barrier removal**

For more information, contact DOJ @ 800 514-0301

Safe Harbor – Existing Facilities

- **Elements that comply with 1991 Standards do not need to be modified to meet the 2010 Standards unless those elements are altered on or after March 15, 2012.**

  Safe Harbor does not apply to elements in existing facilities that <u>were not</u> subject to specific requirements in the 1991 Standards

Elements in 2010 Standards Not Subject to Safe Harbor

(A) Residential facilities and dwelling units

(B) Amusement rides

(C) Recreational boating facilities

(D)Exercise machines and equipment

(E) Fishing piers and platforms

(F) Golf facilities

(G) Miniature golf facilities

(H) Play areas

(I) Saunas and steam rooms

(J) Swimming pools, wading pools, and spas

(K) Shooting facilities with firing positions,

(L) Miscellaneous.

(1) Team or player seating

(2) Accessible route to bowling lanes

(3) Accessible route in court sports facilities

For more information, contact DOJ @ 800 514-0301

Boating facility provisions

Accessible routes, boat slips, boarding piers at boat launch ramps

Boating facilities

- Marinas, public piers with boat slips
- Fixed and floating (not ferry docks)

Recreational Boating Facilities
Section 235

- Number of boat slips required to be accessible (based on the number of slips provided)
- Dispersion of accessible boat slips throughout the various types provided
- Number of boarding piers at boat launch ramps required to be accessible.

Technical provisions

Section 1003

- **Fixed and floating facilities**
- **Accessible routes**
- **Gangways**
- **Accessible boat slips**
- **Boarding piers at boat launch ramps**

Fixed Boating Facilities

Floating Boating Facilities

Gangways

Gangway Slope

- **Gangway slope – connecting floating facilities**
  - **Design for 1:12 maximum slope OR provide at least an 80 foot gangway**

Gangway – Small Facilities

Less than 25 boat slips, the slope of the gangway may exceed 1:12 (8:33%), if the gangway is at least 30 feet long

Gangways Connecting Accessible Boat Slips

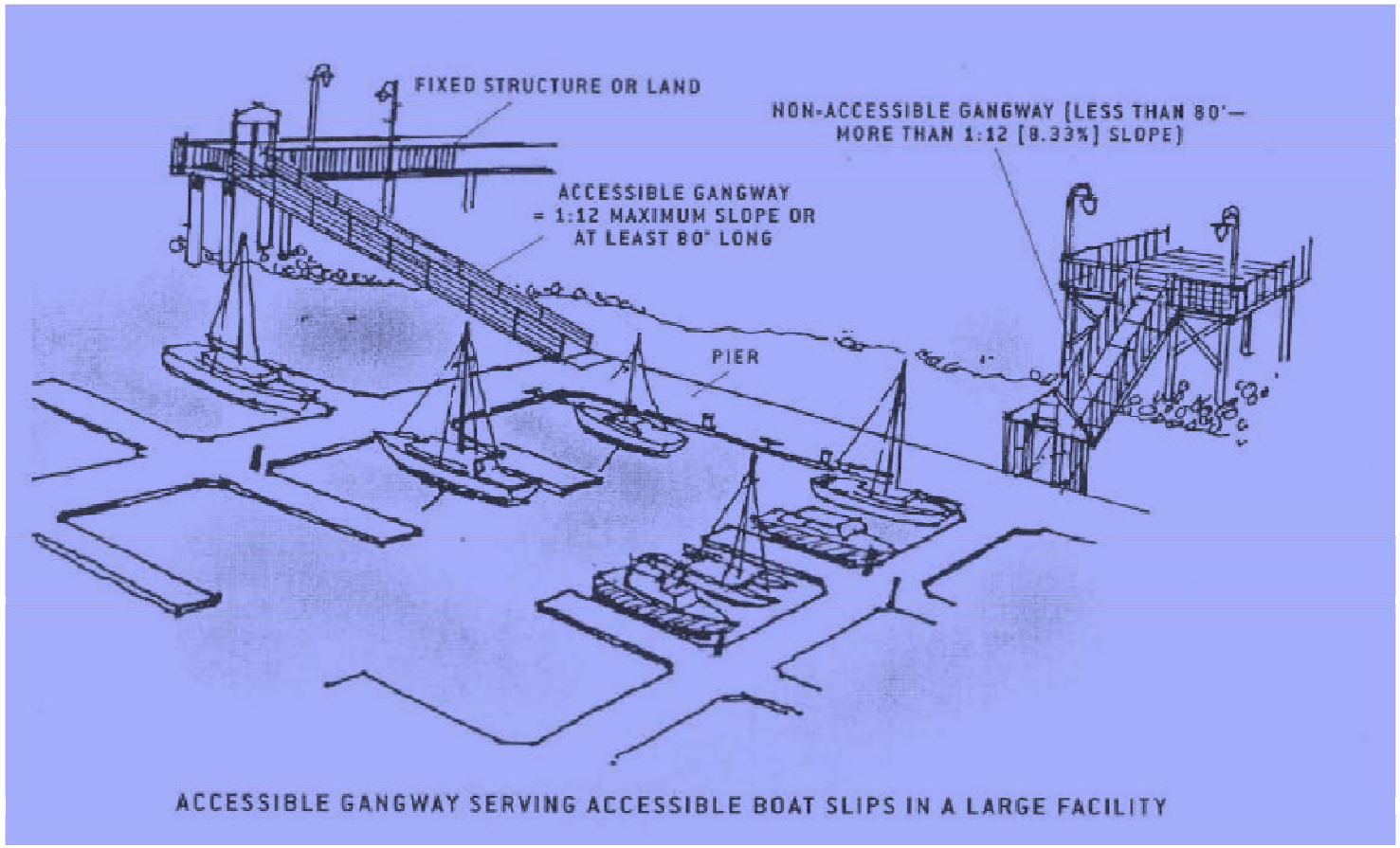

ACCESSIBLE GANGWAY SERVING ACCESSIBLE BOAT SLIPS IN A LARGE FACILITY

Gangways – Gates and Doors

Follow provisions for door maneuvering clearances, 32 inch minimum width, etc.

Gangway – Transition Plates

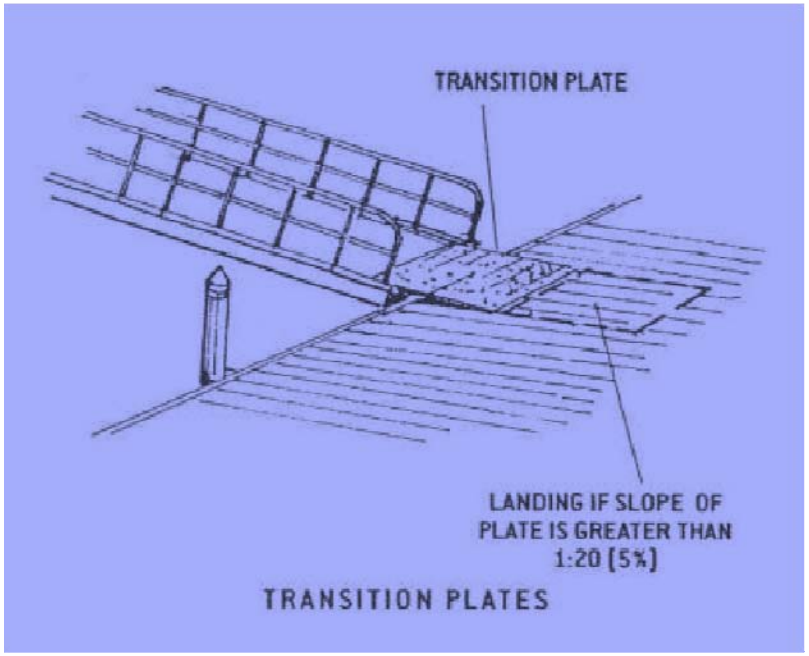

Gangway – Handrail Extensions

Gangway – Width

Cross Slope – Gangways, Transition Plates, and Floating Piers

Route Leading to Accessible Boat Slips

Use of Elevators and Platform Lifts

Boat Slips

- **Number of accessible boat slips**
- **Uses modified vehicle parking table**

Boat Slips Provided	Minimum Accessible
1-25	1
26-50	2
51-100	3
101-150	4
151-300	5
301-400	6
401-500	7
501-600	8
601-700	9
701-800	10
801-900	11
901-1000	12
1001 and over	*

**12 + 1 for each 100 or fraction thereof*

Boat Slips

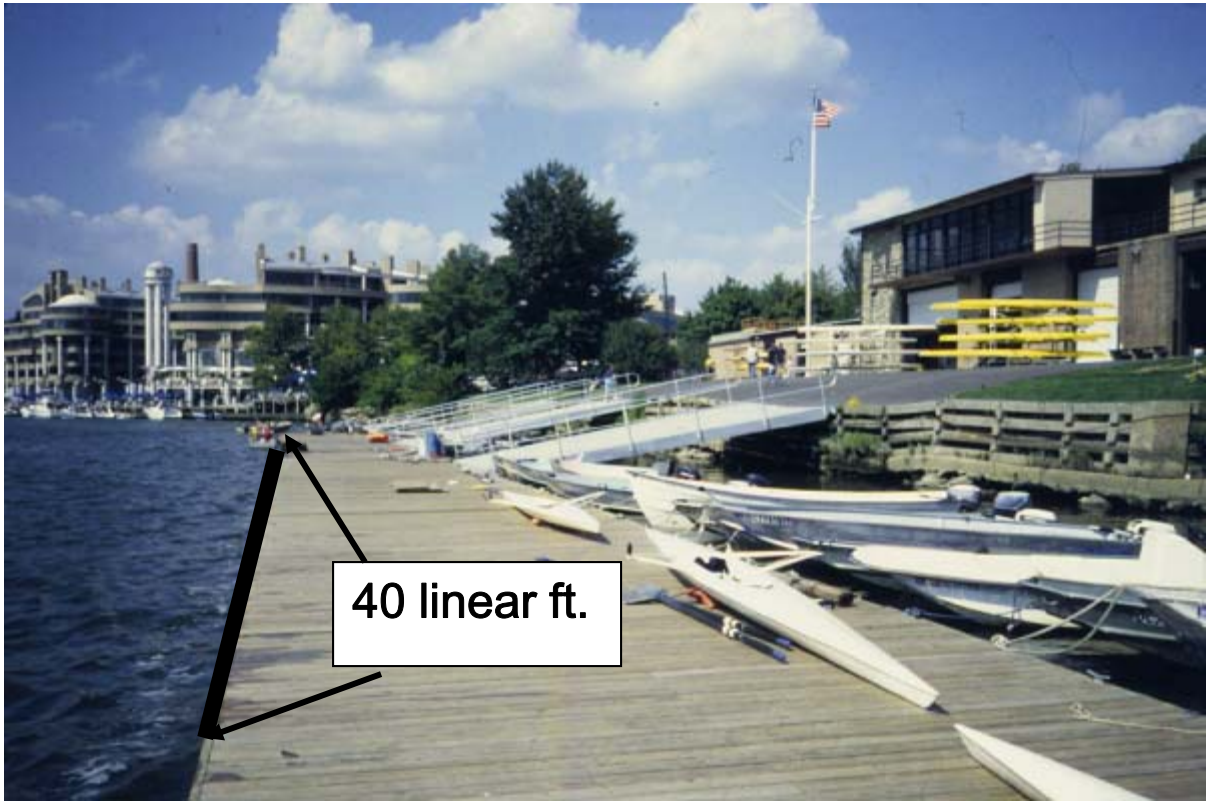

Accessible Boat Slips

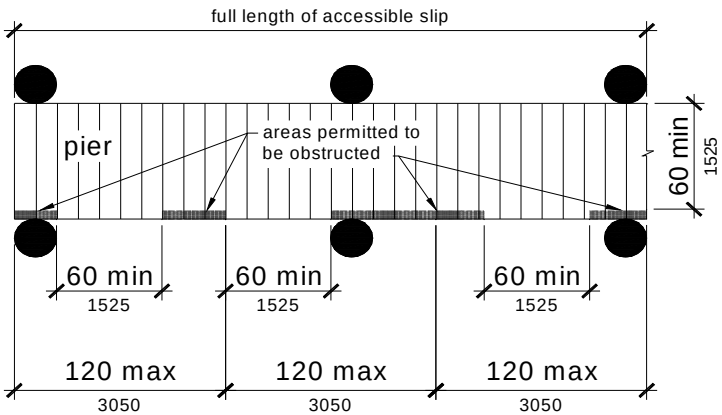

Fig. 59
Pier Clearances

- **Accessible boat slip – 60 inches width of clear pier space**
- **Where obstructed, at least one opening of 60 inches in width every 10 feet**
- **Edge protection permitted**

Accessible Boat Slips – Clear Space Reduction

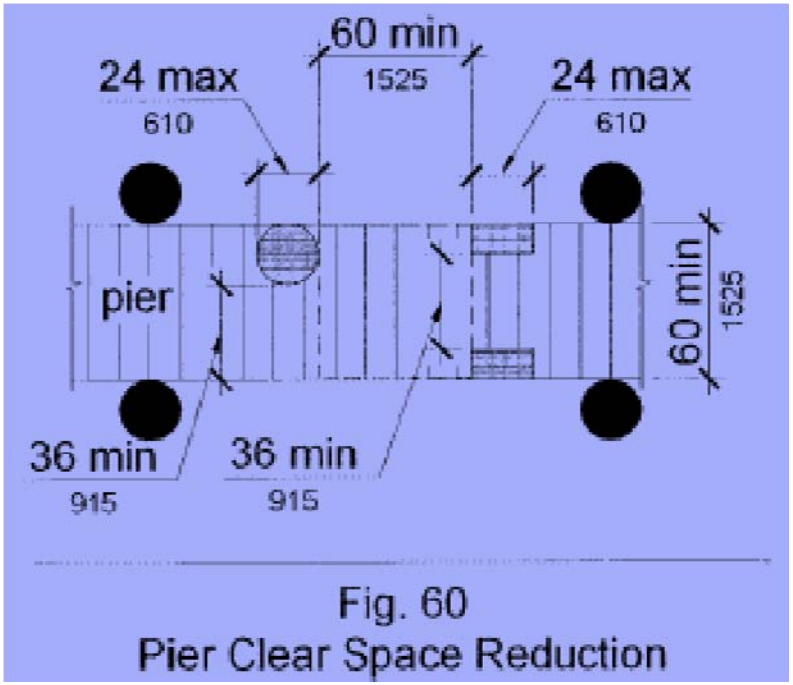

Fig. 60
Pier Clear Space Reduction

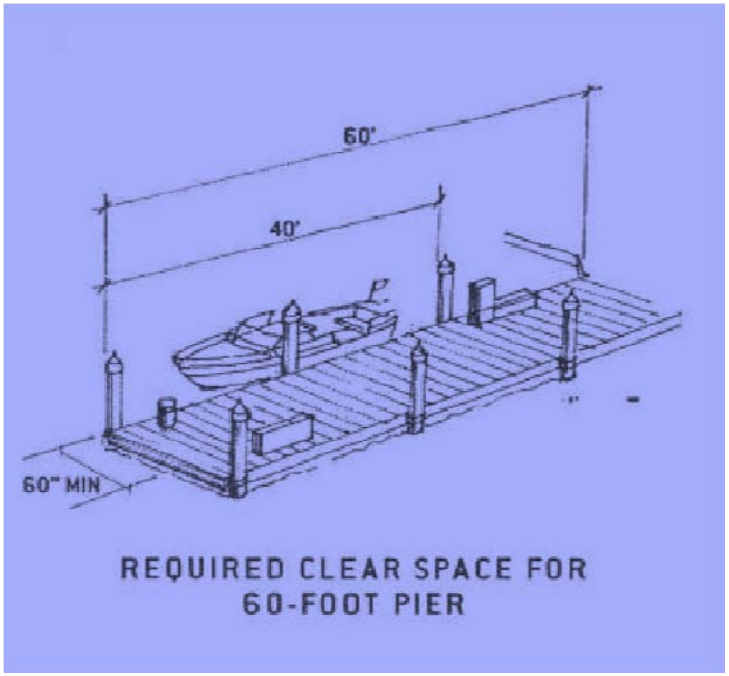

Accessible Boat Slips

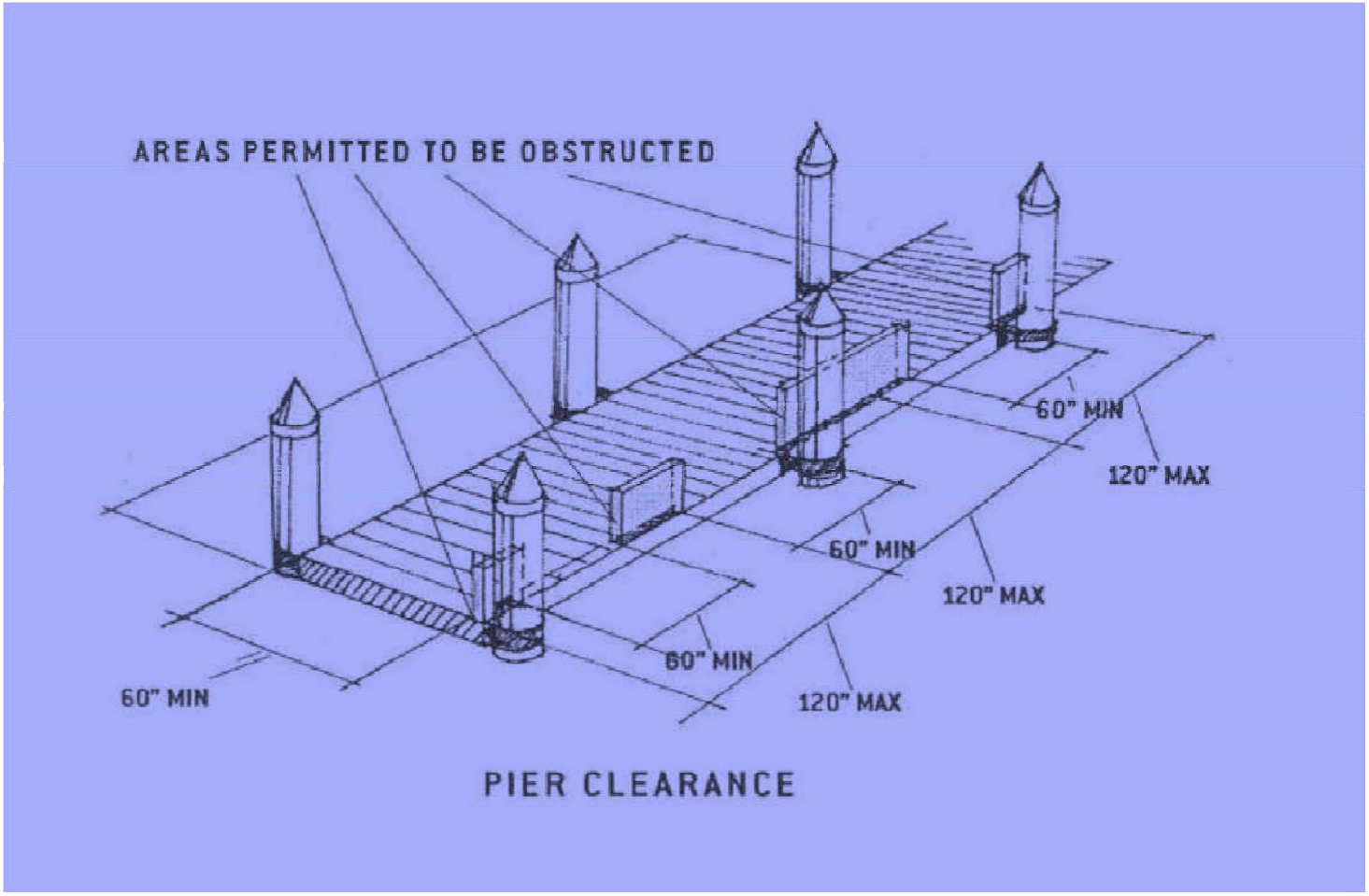

Transfer Methods

Not required by the standards

Accessible Boat Slips - Dispersion

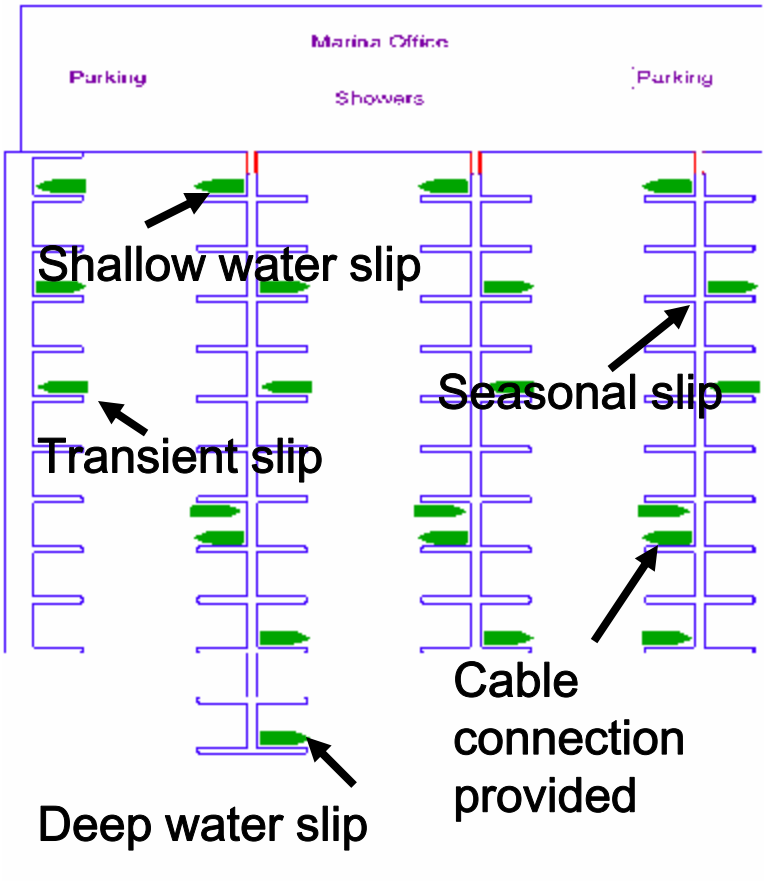

- Dispersed throughout the various types of slips provided
- Does not require an increase in the number of slips required to be accessible

Accessible Boat Slips - Dispersion

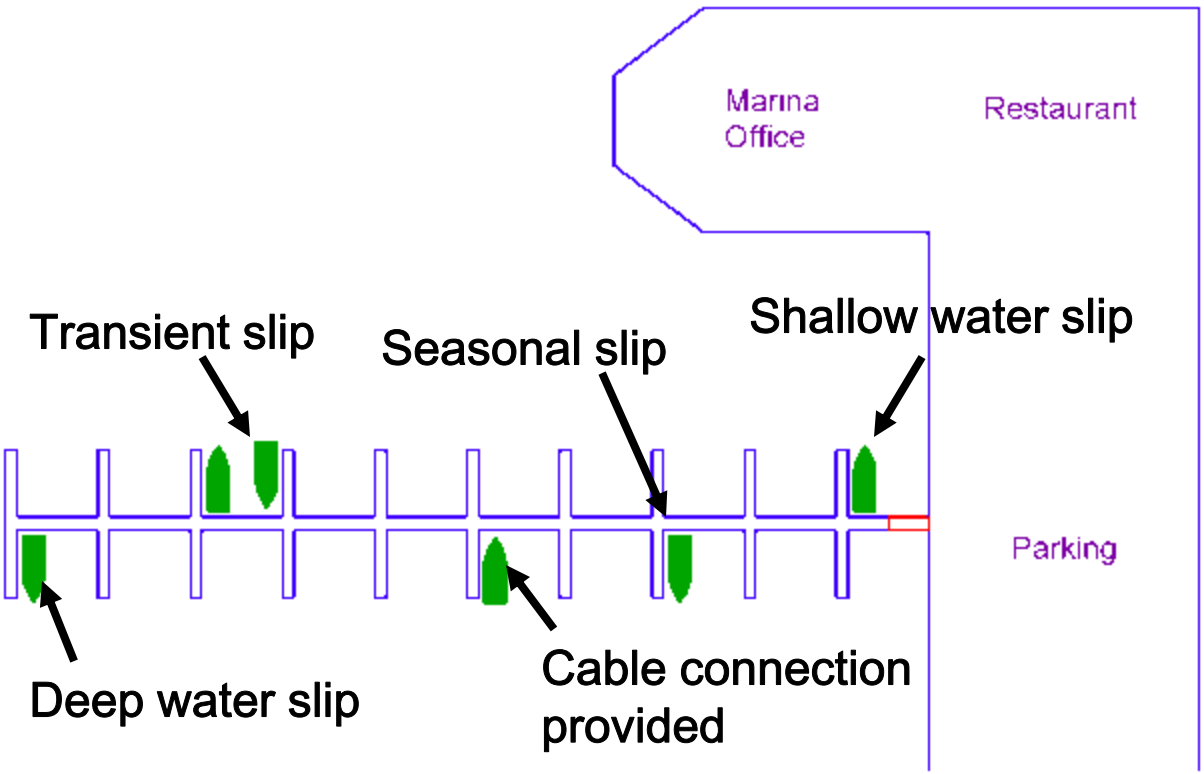

Clustering of accessible slips is permitted

Accessible Boat Slips – Identification

No requirement for identification

- **Not reserved in the same way as accessible vehicle parking spaces**
- **Make information regarding accessible boat slips available in promotional material or a facility guide**
- **Contact DOJ on operational issues**

Accessible Boat Slips – Edge Protection

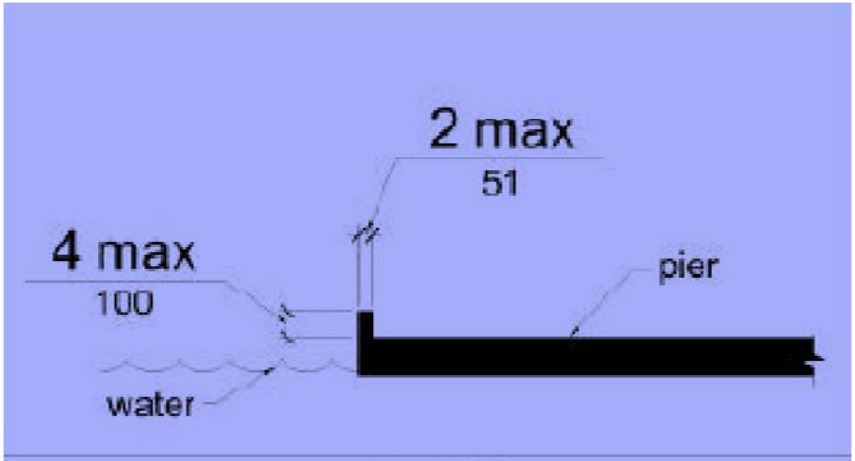

Fig. 61
Edge Protection at Pier

- **Edge protection is not required**
- **If provided at opening…**
- **4 inches high maximum and 2 inches deep maximum at the continuous clear openings**

Accessible Boat Slips – Hose Bibbs, Water Supply Hoses, Outlets for Electric, Cable, etc.

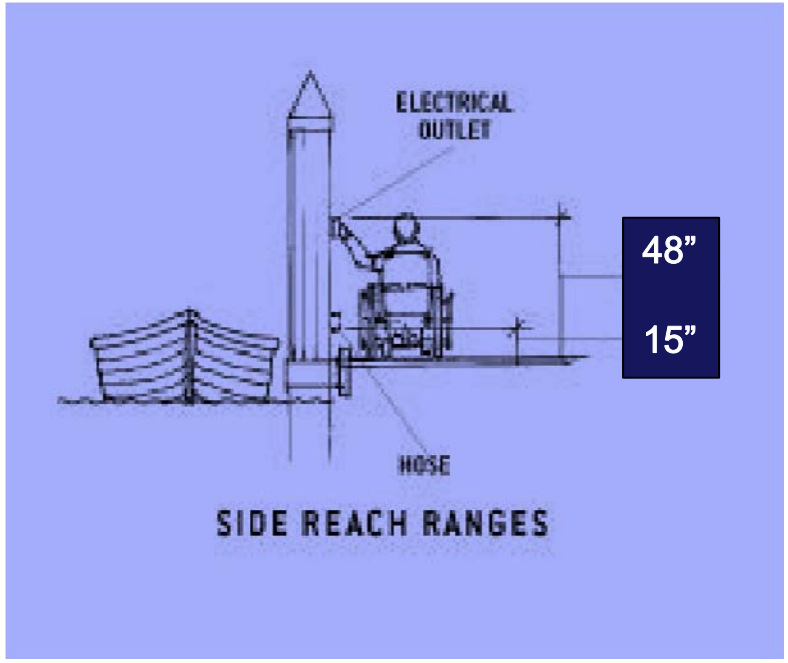

Accessible Boat Slips – Cleats and Other Securement Devices

Not required to be located within reach ranges

Boarding Piers at Launch Ramps

- Where gangways connect
  - Design for 1:12 OR provide at least a 30 foot gangway
- Accessible route within boat launch ramp – maximum slope does not apply

Boarding Piers at Boat Launch Ramps - Clearances

- Entire length of the boarding pier must be 60 inches wide minimum
- Every 10 feet maximum of pier edge must have at least one clear opening 60 inches in length

Launch Ramps without Boarding Piers

Alterations to existing facilities

What's Considered an Alteration?

- **Examples of alterations**
  - **Redesigning boat slips**
  - **Replacement of floating docks**
  - **Re-surfacing parking lot**
- **Painting, re-roofing, and general maintenance activities are not considered an alteration**

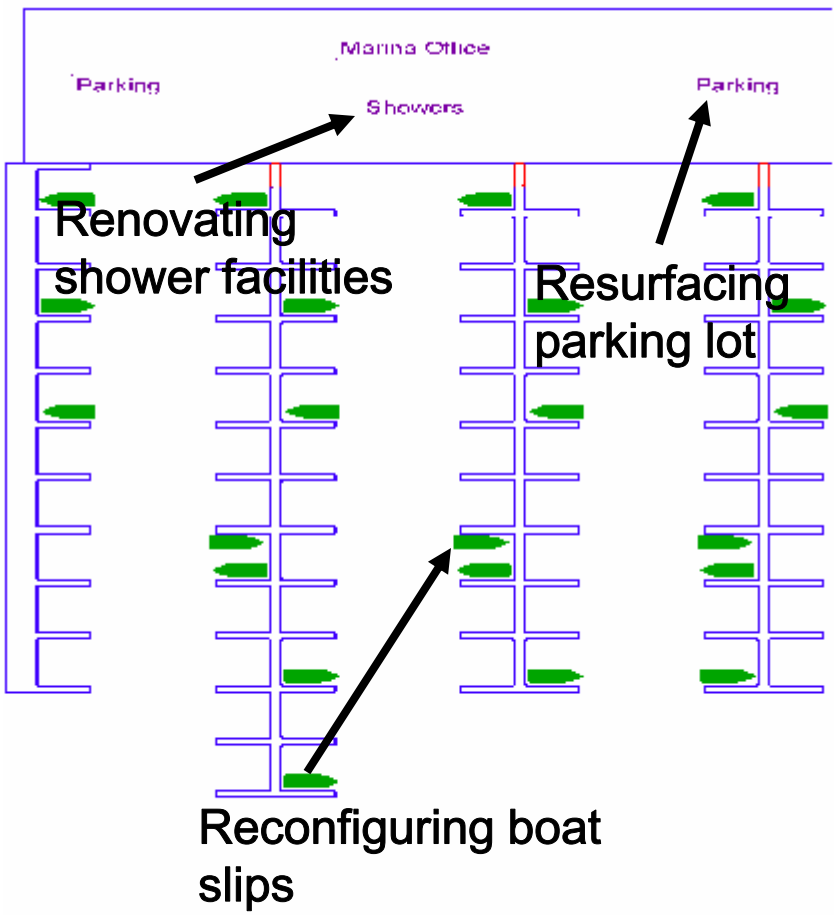

Requirements for Alterations

- **Follow accessibility standards new construction**
- **"Technically infeasible"**
- **"What you touch - you fix"**
- **Alterations to "primary function areas" carry additional obligation**

Requirements for Alterations – Path of Travel Obligations

- Where alteration is made to "primary function area"
- Area altered must be done in compliance with standards along with an accessible "path of travel" to the altered area
- 20% disproportionate rule

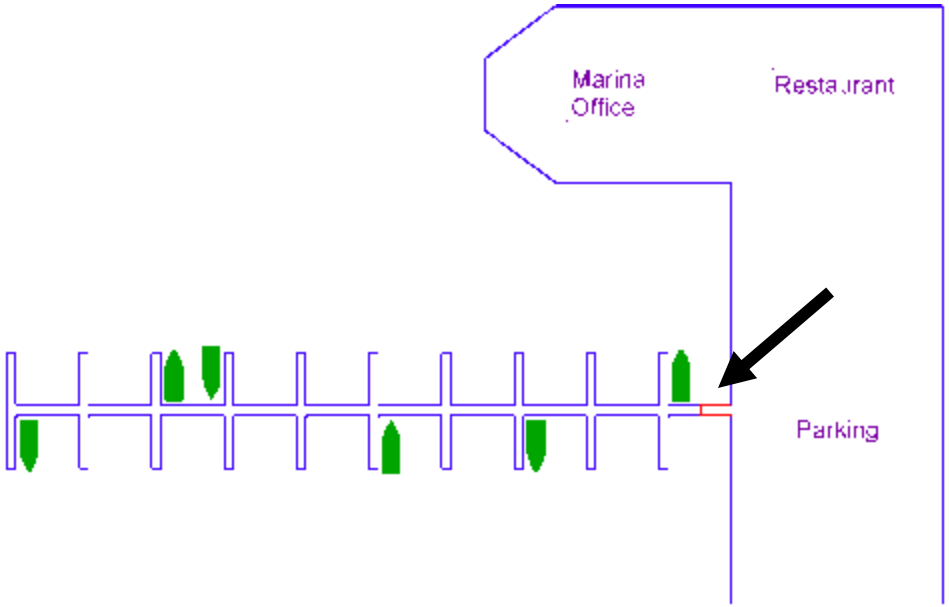

Gangway – Alteration

Where an existing gangway is replaced or altered, an increase in the length is not required

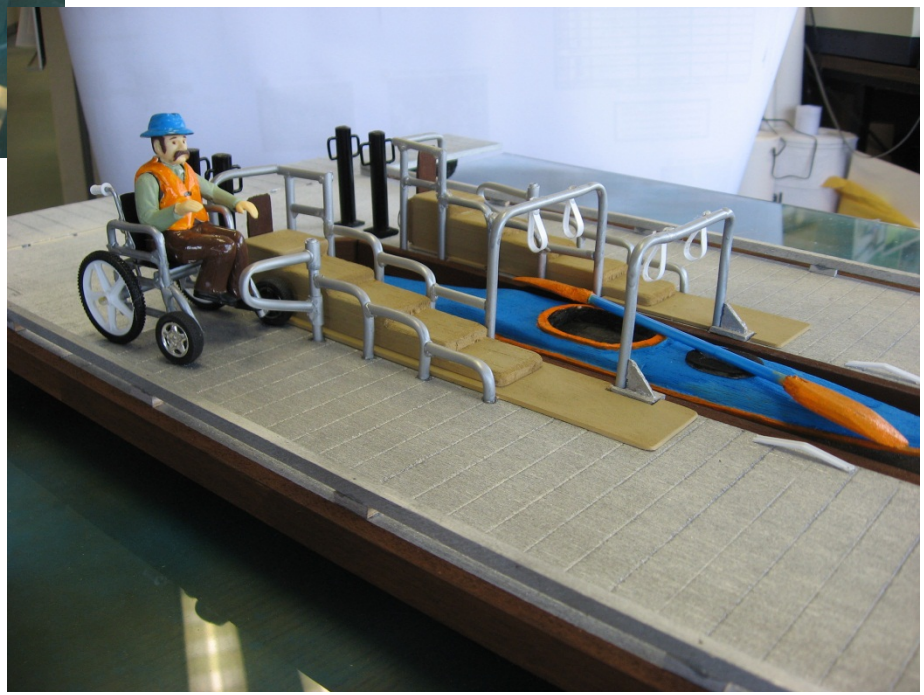

UNITED STATES ACCESS BOARD

Fishing piers and platforms

- Accessible routes serving floating piers/platforms
- Use boating gangway exceptions
- Design gangway to 1:12 OR provide up to a 30 ft. gangway

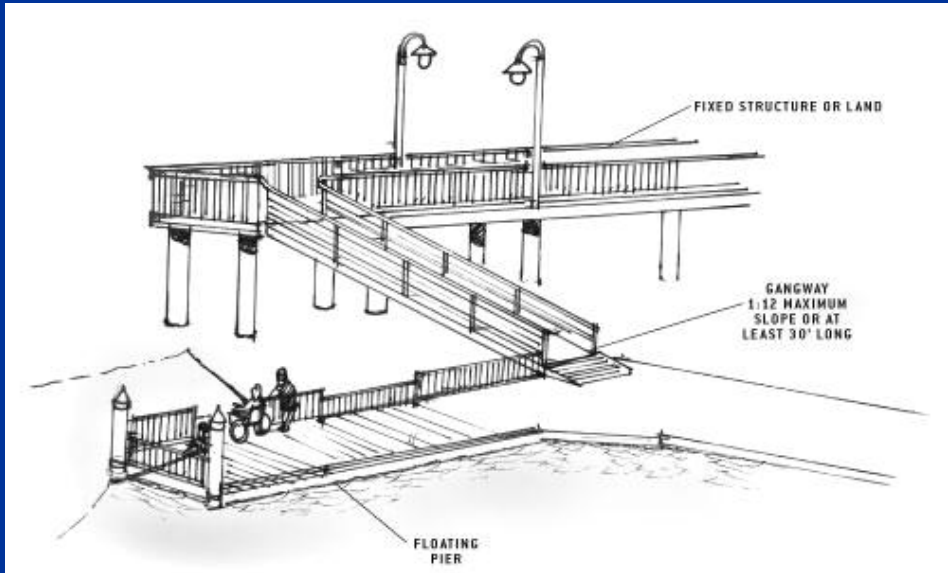

ACCESSIBLE GANGWAY SERVING ACCESSIBLE FLOATING PIER IN A LARGE FACILITY

Fishing piers and platforms

- Railings - Where provided
- Maximum 34 inch height for 25% of the railing lowered railing dispersed
- Exception: where a guard is provided which complies with ICC/IBC

Fishing piers and platforms

- Edge protection where railings are provided
- 2 inch minimum
- 30 inches x 48 inches clear space
- At least one maneuvering space

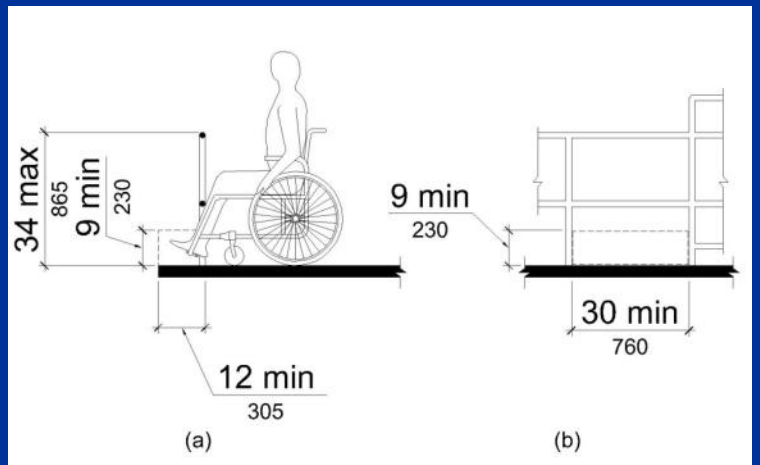

Fig. 62
Edge Protection at Fishing Piers

Shooting Facilities

- Fixed firing positions
- 5%, not less than one 60 inch diameter space - slope 1:48 max.

Site Amenities

- Additional Site Elements Could Include
  - Picnic Tables
  - Toilet Facilities
  - Group Staging Areas
  - Maps of the River & Points of Interest
  - Locations of other Accessible Launches

Technical Assistance Material

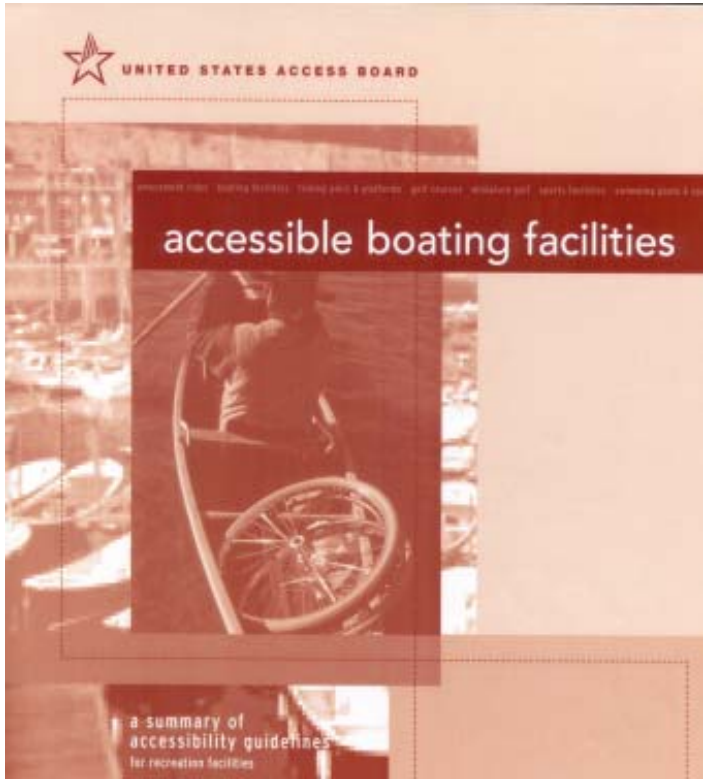

http://www.accessboard.gov/indexes/pubsindex.htm

How to reach the Board

(800) 872-2253
OR (202) 272-0080

Bill Botten -- 202-272-0014

outdoor@access-board.gov
botten@access-board.gov

www.access-board.gov